Note:
1.Do Not Scale Drawings,Use Figured Dimensions Only;
2. This drawing is valid only if with corresponding edition stamp.

1*5

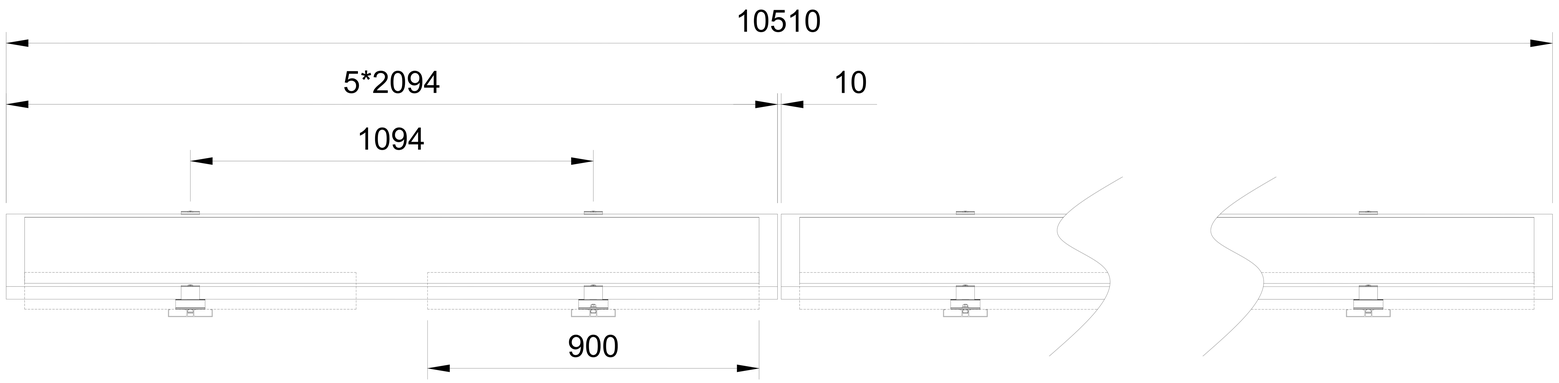

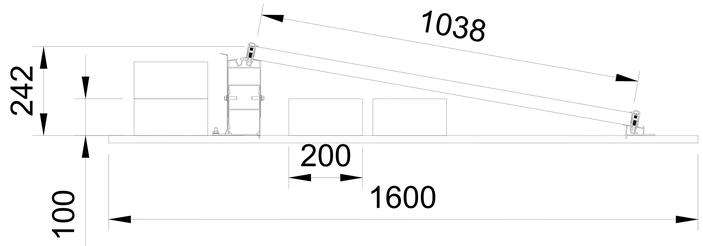

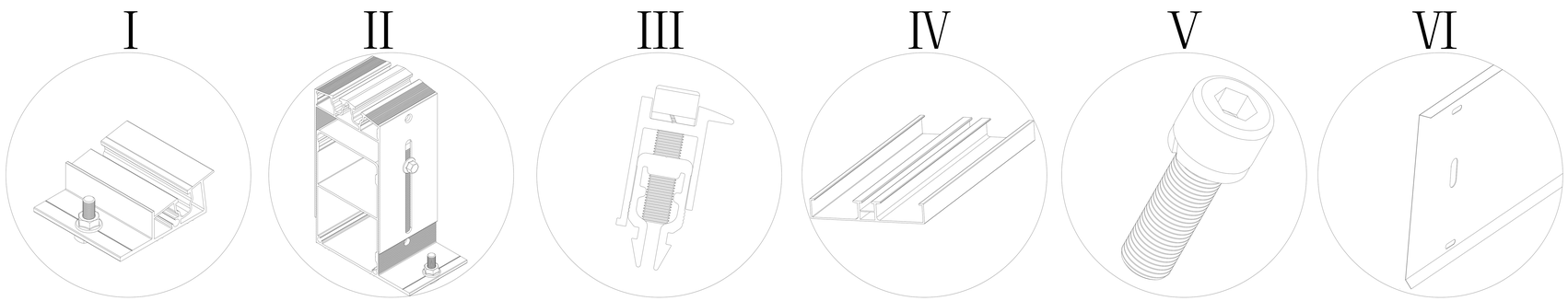

Item	Part No.	Part Name	Spec.	Qty	Weight:kg	Material	Remark
6	HQ-WS-2094	Wind Screen	L2094	5		Magnesium-aluminum-zinc plate	
5	HQ-HB-M8x20	Hexagon socket head bolt	M8*20	20		SUS 304	
4	HQ-BP-1500	Bottom beam+EPDM (foam) 120 * 150 * 5mm * 3	L1500	10		AL-6005-T5	
3	HQ-REC01-35	End Clamp Kit 35mm	L50	20		AL-6005-T5	
2	HQ-RS-80	Rear Support assembly	L80	10		AL-6005-T5	
1	HQ-FS-80	Front Support	L80	10		AL-6005-T5	

Tilt angle(°):	10
Wind Speed（m/s):	35m/s
Snow Load (cm):	1.26KN/m²
Module (mm):	2094*1038*35mm
Rows*Columns(PCS):	1*5

hqmount 虎克（厦门）新材料有限公司
Xiamen HQ Mount Tech. Co.,Ltd.

Group	BR6	Title	匈牙利压载项目		BarCode	****	
					View		
Dwg No.	HQ202304240201	Scale	1:1	Total page 1 pages the 1	Revision	V1.0	A3